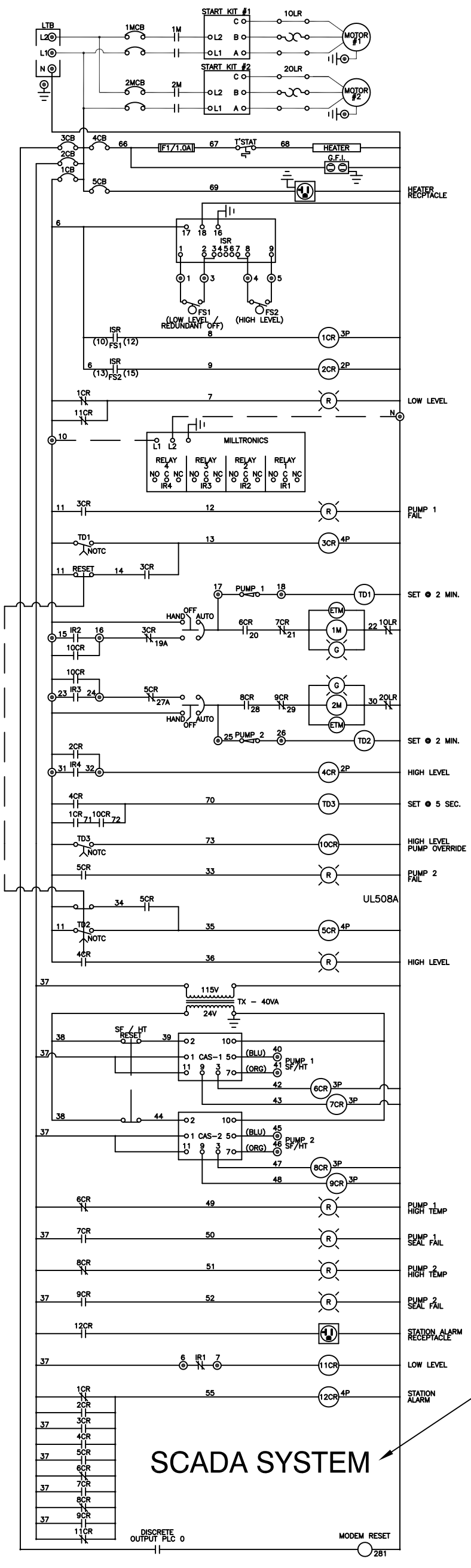

NOTE:

1. SERVICE ENTRANCE RATED DISCONNECT SWITCH MUST BE INSTALLED BETWEEN POWER SUPPLY AND THIS PANEL
2. THIS PANEL MUST BE INSTALLED OBSERVING ALL APPLICABLE STATE AND LOCAL CODES, AND AS PER LATEST REVISION OF NEC
3. ENCLOSURE MUST BE CONNECTED TO A GOOD EARTH GROUND

*FINAL APPROVAL ON LAYOUT BY MONROE METROPOLITAN AREA WASTEWATER TREATMENT PLANT

INCOMING SERVICE

_____ VAC
_____ PH
_____ HZ
_____ W

MOTOR #1 DATA

_____VAC, ___PH., ___HZ
_____HP @ _____F.L.A.

MOTOR #2 DATA

_____VAC, ___PH., ___HZ
_____HP @ _____F.L.A.

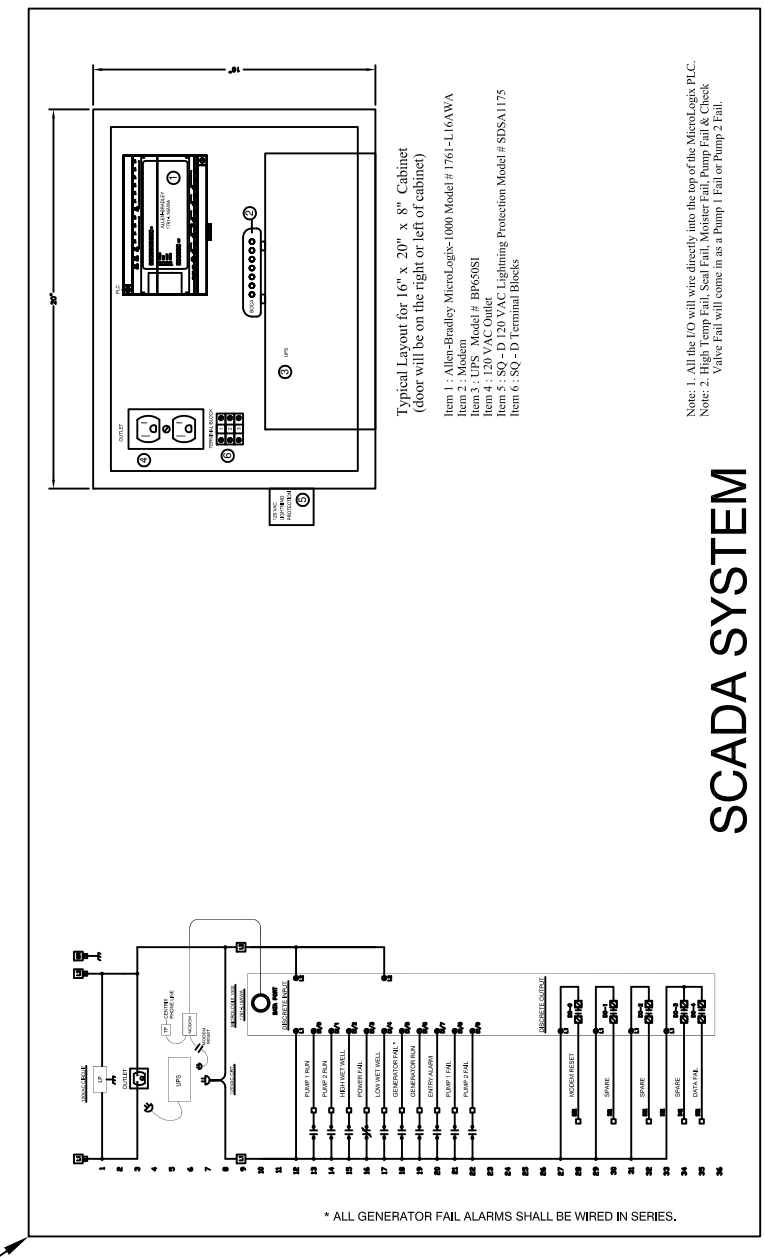

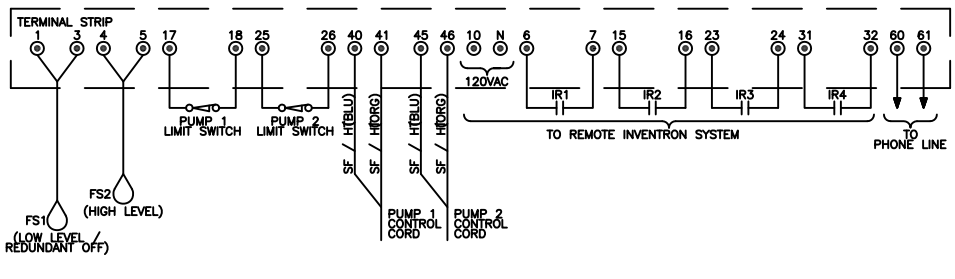

⊙ TERMINAL POINT
+ WIRE CONNECTION
—— FACTORY WIRING
--- FIELD WIRING

REVISIONS		
NO.	DRAWN BY:	DATE:

DWG. OF RECORD

DATE: _____

CITY OF MONROE, MICHIGAN
ENGINEERING DEPARTMENT

CITY OF MONROE– SMALL SANTIARY SEWER PUMP STATION DETAILS
TYPICAL CONTROL DUPLEX PANEL

SCALE: NONE FILE NO. F–XXXX

DATE: FEBRUARY, 2000 SHEET NO. 2 OF 2

APPROVED: _____
CITY ENGINEER

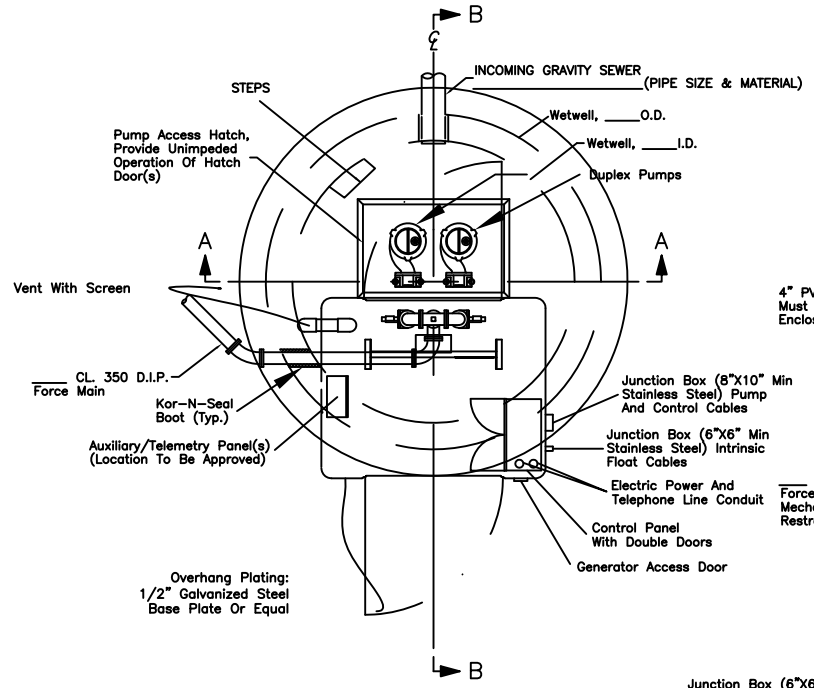

PLAN VIEW

NOT TO SCALE

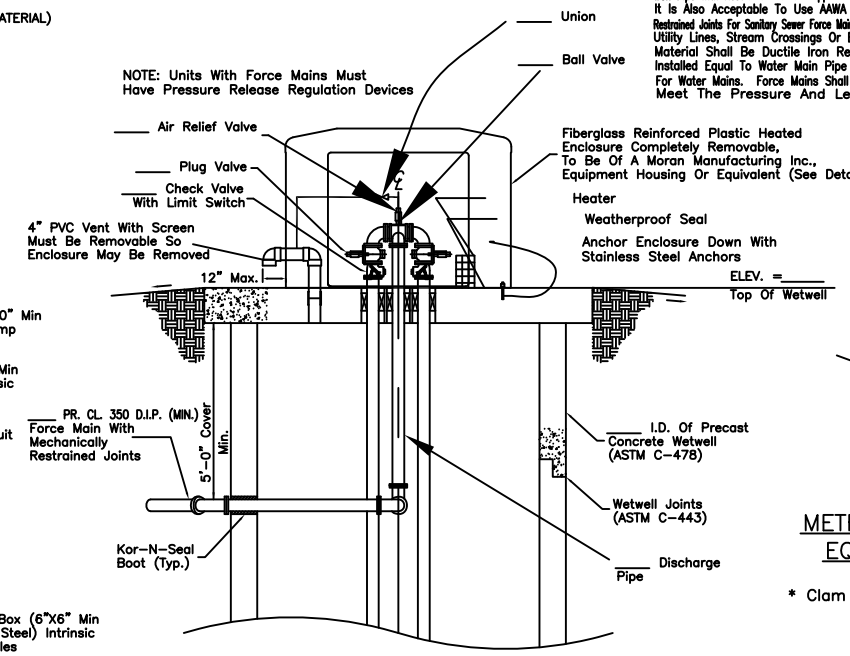

SECTION A-A

NOT TO SCALE

SANITARY SEWER FORCE MAIN PIPE

Sanitary Sewer Force Main Pipe Shall Be Minimum Pressure Class 350 Cement-Lined Ductile Iron Pipe With Restrained Joint Wrapped With Polyethylene Encasement In Accordance With AWWA C105. It Is Also Acceptable To Use AWWA C-900 CL 150 PVC Water Main Pipe With Restrained Joints For Sanitary Sewer Force Main Pipe. Wherever Sanitary Sewer Force Mains Deflect Under Other Utility Lines, Stream Crossings Or Be Installed In Casing Pipes, The Force Main Pipe Material Shall Be Ductile Iron Restrained Joint Pipe. The Force Main Shall Be Installed Equal To Water Main Pipe And Be Furnished With Thrust Blocks As Required For Water Mains. Force Mains Shall Be Tested At 150 psi For Two (2) Hours And Must Meet The Pressure And Leakage Requirements Of AWWA C-600.

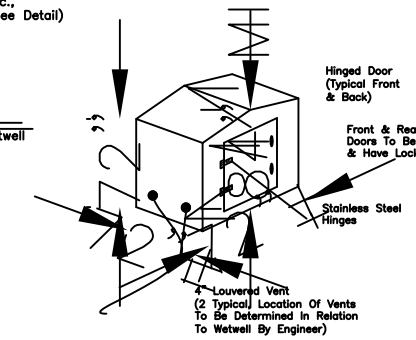

METROPOLITIAN INDUSTRIES, INC. OR EQUIVALENT EQUIPMENT HOUSING

NOT TO SCALE

* Clam Shell Designs Are Not Acceptable Equal Enclosures

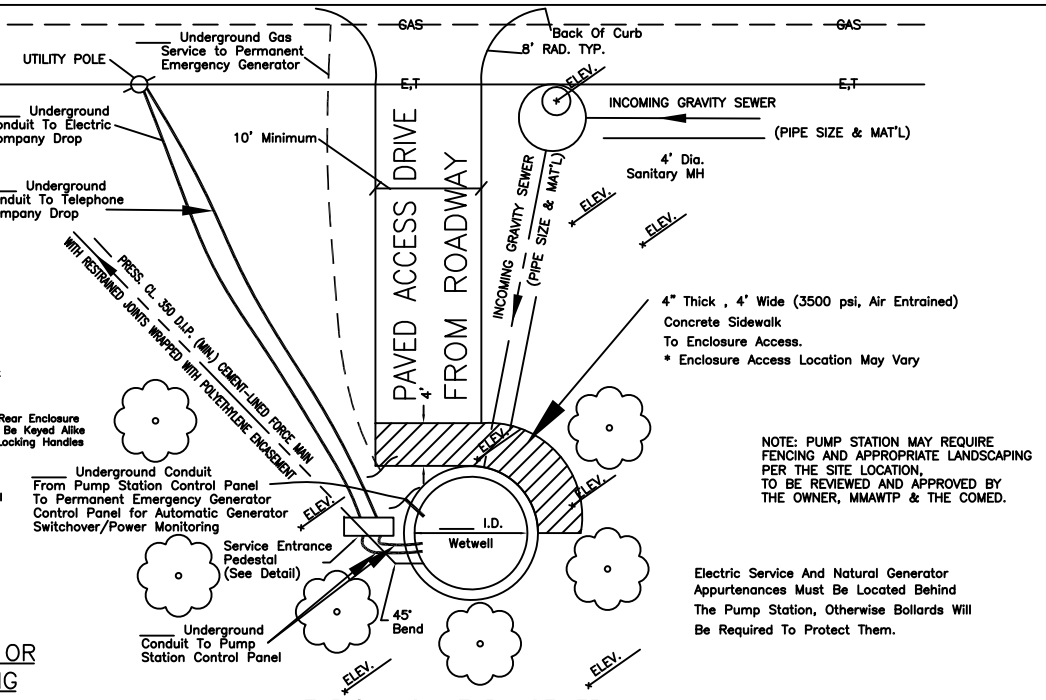

TYPICAL SANITARY SEWER PUMP STATION SITE PLAN LAYOUT

NOT TO SCALE

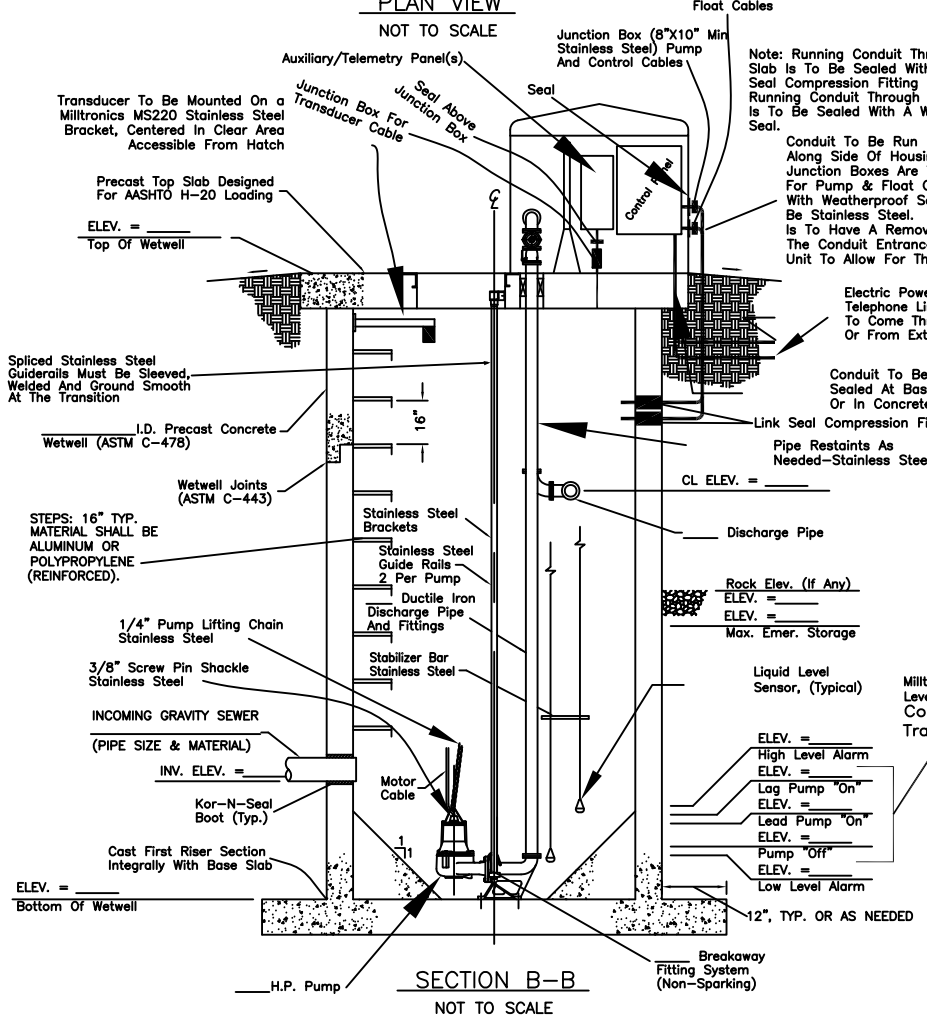

SECTION B-B

NOT TO SCALE

PUMP REQUIREMENTS

PUMP FLOW REQUIREMENT: Q=_____GPM

TOTAL DYNAMIC HEAD: TDH=_____FEET

NOTE: FIGURES ARE TO BE PLACED IN THE UNDERLINED AREAS AS SHOWN, TO BE DETERMINED BY THE DESIGN ENGINEER.

Note:
All Boxes And Disconnect Shall Be Lockable With Keys Provided To the Owner.

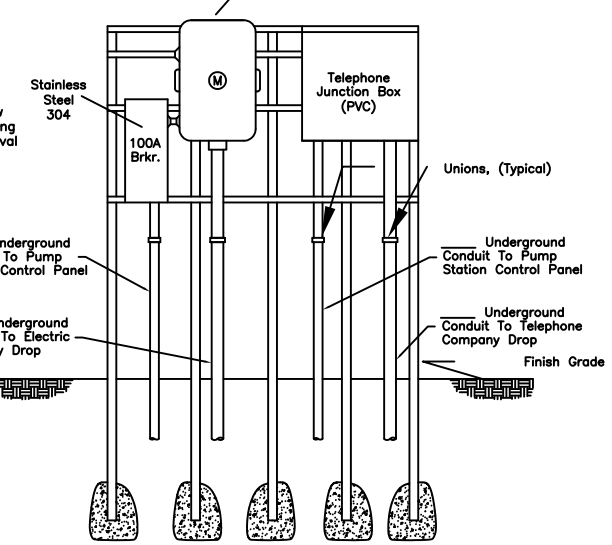

Milltronics Hydroranger 200 Level Control
Controller Model# 7ML1034-1AA1
Transducer Model# XPS15

SERVICE ENTRANCE PEDESTAL DETAIL

NOT TO SCALE

PUMP STATION NOTES

1. Area 3 Feet Below Grade Must Be Kept Free Of Concrete To Minimize Frost Heave.
2. Supports Must Be Minimum 12 Gauge Hot Dipped Galvanized. Provide Rust Proof Finishes Throughout With Special Emphasis On Weld Joints & Cut Ends.
3. The Contractor Will Furnish And Install A Separate Grounding Electrode.
4. Unistrut Or Equivalent Stainless Steel Framing And Fittings.
5. All Grounding Of Equipment And Services Shall Be Per N.E.C. Article 250.
6. Provide #6 Ground Conductor From Main Breaker MD-1 To Telephone Junction Box.
7. All Conduit Above Ground Shall Be Rigid Galvanized Steel Conduit (RGS) And All Conduit Below Grade Shall Be PVC Schedule 80 Conduit Unless Otherwise Noted.
8. Provide Watertight Hubs At Conduit Entrance At All Enclosures Mounted Outdoors.
9. Provide 4' Wide, 4" Thick Concrete Sidewalk To Housing Access Door From Paved Drive.
10. The Pumps And Electrical Equipment In The Wetwell Must Meet The Requirements Of The NEC For Class I , Group D, Division 1 Locations Per Paragraph 42.35 Of The RSWF.
11. The Submersible Pump Motor Cords Shall Be Designed For Flexibility And Serviceability Under Extreme Conditions And Meet The Requirements Of The NEC For Flexible Cords In Wastewater Pump Stations.

GENERAL NOTES

1. All Applicable Local, State, And Federal Codes Shall Be Observed For This Construction. Pump Station Must Comply With "Recommended Standards For Wastewater Facilities" (10 State Standards – 2004 Edition).
2. This Drawing Is Diagrammatic For Bidding Purposes Only And Is Not Intended For Use As A Fabrication Or Installation Drawing. Submit Appropriate Shop Drawings Of The Actual Station For The Monroe Metropolitan Area Wastewater Treatment Plant (MMAWTP) And The City Of Monroe Engineering Department (COMED) Review And Approval.
3. All Controls, Instrumentation And Equipment Must Be Compatible With The MMAWTP Equipment. Suppliers Should Coordinate With The MMAWTP At (734) 241-5926 Prior To Bidding The Project For Detailed Requirements. Pump Station Supplier To Provide Fabrication Drawings, And Reinforcing Details Of Top Slab, And Specifications Detailing Equipment Location, Size, Type, Supports, Material Lists, And Any Other Pertinent Information As Part Of The Shop Drawing Submittal.
4. Provide Explosion Proof Pumps Capable Of Meeting The Pumping And Total Dynamic Head Requirements As Set Forth In The Design Specifications. Pumps Shall Be Capable Of Passing 3" Solids And Shall Be Equipped With Hour Meters. Motors Shall Be 3 Phase 4 Pole Designed To Operate At 1750 RPM And Meet The Available Electric Supply Requirements. Lifting Chains, Guide Rails, Brackets, Hardware, And Cable Holder For Each Pump Unit Shall Be 316 Stainless Steel. Provide Pump Tripod Lifter Designed For Use Over Pump Access Hatch Opening. Each Pump Shall Have An AC Tech Drive (Up To 25 HP) To Accommodate The 3 Phase Pump Motor Requirement If 3 Phase Is Not Readily Available. Generators For Stations Shall match Incoming Utility Voltage.
5. Pipe Joints Inside The Wetwell Shall Be Flanged Unless Noted Otherwise.
6. Level Controls Shall Be Milltronics Hydroranger 200 Ultrasonic Units Providing Pump Start/Stop Alteration & Delayed Starting, Also To Provide 2 Backup Float Balls For High & Low Alarm With Sufficient Length Of Cable To Permit Floats To Be Set At The Lowest Elevation In The Wetwell. Level Control Cables And Power Cables Shall Be Run In Conduit To The Control Box. All Controls And Wetwell Equipment Shall Be Intrinsically Safe. Provide Gas Tight Seals In Conduit. Provide Junction Box Between Wetwell And Seals For Maintenance Of Cables. Verify Final Float & Level Settings Prior To Manufacture.
7. Control Panel Shall Be Nema 4 Rated, With An Alarm Light To Be Mounted On The Exterior Of The Shelter Enclosure Visible From Street. Panel Shall Incorporate Pump Controls, Alarms, And Telemetering In One Box & Provide A Utility Receptacle Near The Box, A Utility Light, & Heater Unit. A Gorman-Rupp Autostart System, Autostart Generator With Autotransfer, Or Equivalent Shall Be Used In All Small Pump Stations. A Permanent Emergency Generator System Must Be Provided At The Site Unless Alternative Measures Have Been Reviewed And Approved By The MMAWTP And The COMED. The Permanent Generator System Shall Be In An Enclosure Having A Separate Control Panel & Be Hard-Wired For Emergency Pumping. Final Review And Approval Of The Permanent Emergency Backup System Shall Be By The MMAWTP And The COMED.
8. Access Hatches Shall Be Constructed Of 1/4" Aluminum Plate In A Double Door Configuration. Hatches Shall Have Hasp For Padlocking And Each Door Shall Be Supplied With A Self-Locking Support Arm. Hatch Doors Must Be Capable Of Being Opened With The Enclosure Doors In An Open or Closed Position. Locks Are To Be Provided & Keyed to MMAWTP Specifications.
9. The Alarm System Shall Provide For High Level, Low Level, And Mechanical Failure Alarms. Contact The MMAWTP At (734) 241-5926 Concerning Required Alarms And Valve Limit Switches. All Wiring At The Station & MMAWTP To Be Provided By The Contractor. If Spare Alarm Panels Are Not Available At The MMAWTP, The Contractor Shall Furnish & Install The Necessary Equipment & Wiring.
10. Battery Backup For The Alarm System And Telemetry To Be Provided. The Proposed Alarm System Is To Be Hardwired To The MMAWTP.
11. Shop Drawings For The Pump Station And All Associated Equipment/Controls Must Be Submitted To, And Approved By, The MMAWTP And COMED Prior To Construction.
12. Pump Controls To Automatically Alternate Lead And Lag Pumps. All Relays To Have Light Emitting Diode. Relay Is To Have A Push To Test Option.
13. Gravity Overflows Shall Be Provided Wherever Possible. If an Overflow is provided the station shall be Equipped with a Portable Generator Receptacle. The Receptacle shall be a 3 position On-Off-On Switch. The MMAWTP Emergency Pumping Procedures Shall Be Used In The Event Of Electrical Service Failure & Permanent Emergency Generator Failure. The Procedures Are As Follows:
    1. Upon Failure Of Electrical Pump Station Failure, The Emergency Natural Gas Backup Generator Will Be Used And The Wetwell Level Will Be Monitored.
    2. If The Natural Gas Backup Generator Fails, The Wastewaster Treatment Plant Has 6 Portable Electrical Backup Generators Available For Use At The Station.
    3. If No Portable Backup Generator Is Available The Wetwell Hatch Will Simply Be Opened And A Portable Pump Dropped Into The Wetwell To Pump The Wastewater To The Nearest Downstream Sanitary Sewer Manhole As A Bypass. The Wetwell Level Is Then Monitored Thereafter.
14. Alarm Telephone Services At The Pump Station & The MMAWTP Are To Be Ordered By MMAWTP. Prior To Ordering, An Address Of Of The Proposed Station Is To Be Provided & The Service Entrance Pedestal Is To Be In Place.
15. Electrical Diagrams Must Be Provided As Part Of Shop Drawing Submittal & Approval.
16. All Electrical Work Shall Be Done In Strict Accordance With 2002 National Electrical Code (NEC) & Local Code Enforcement Agencies Requirements. Electrical Contractor Shall Obtain All Required Permits & Inspections. Provide A Copy Of Acceptance By Electrical Inspector, & Shall Guarantee The Installation For One Full Year From Date Of Owners Acceptance.
17. All Equipment & Material Shall Be New & Unused, Approved For The Purpose & Bear A U. L. Label Whenever Such Material Or Equipment Is Used.
18. The Contractor Shall Arrange A Meeting With The Owner, MMATWP, & Project Engineer To Explain The Operation Of The System, A Factory Representative Shall Explain The Programming Of The Motor Starter. Four (4) Copies Of Operating & Maintaining Manuals Shall Be Given To The Owner/Project Engineer.

REVISIONS

NO.	DRAWN BY:	DATE:
1	BSL	7-27-00
2	BSL	7-22-03
3	BSL	2-11-04
4	DGC	7-05-05
5	BSL	2-14-08
6	BSL	2-11-09

DWG. OF RECORD

DATE:

CITY OF MONROE, MICHIGAN
ENGINEERING DEPARTMENT

CITY OF MONROE- SMALL SANITARY SEWER PUMP STATION DETAILS
GENERAL SPECIFICATIONS & DETAILS

SCALE: NONE FILE NO. F-XXXX

DATE: FEBRUARY, 2000 SHEET NO. 1 OF 2

APPROVED: _____
CITY ENGINEER